ACE

BEAUTIFUL,
CONCISE &
TENACIOUS





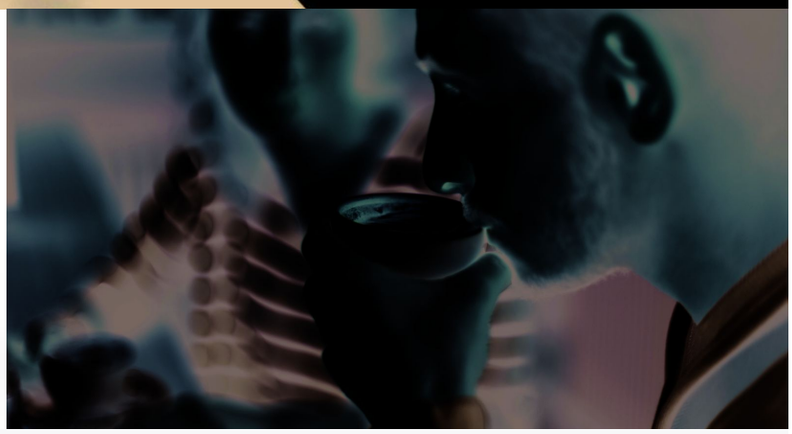

Nestled quietly within the heart of Monaco is our small, but perfectly formed factory, hand-crafting espresso machines since 1956. We combine a genuine passion for innovation and coffee excellence, with exceptional quality and reliability to produce the finest machines for any circumstance or environment.

www.conti-espresso.co.uk

ESTD 1956
Conti
MONACO

ACE



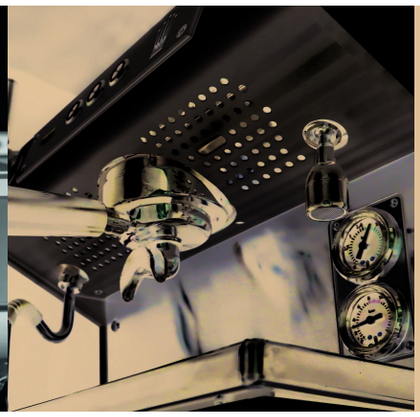



ACE, our dedicated 1grp precision espresso machine, perfect for small, niche venues or serious domestic barista, where a passion for coffee knows no limits.

Multi Boiler, Triple Heat Zone System

With an independent coffee boiler and coffee group accurately temperature controlled by its own PID system, supplied with preheated water from our steam boiler exchanger, Ace ensures perfect precision for your coffee every time. Each parameter is adjustable to offer perfect brew temperatures for coffees of different origin or roast profile.

Soft Pre-Infusion

Intended to replicate the elementary yet effective one-way pre-infusion found originally in lever espresso machines, our in-house system ensures that the barista can fully saturate the coffee puck under controlled low pressure. This results in incredibly consistent extraction and espresso with increased body and better mouthfeel.

Small But Mighty

Despite its compact footprint, the Ace has serious capacity, packing in a 2.75l steam boiler and 0.9l coffee boiler, with the added ability to utilise our power management system to increase or decrease the power consumption at will.

Additional Features:

Customisation
ACE offers core colours of Graphite Black and Papyrus White, but is available to order in a choice of 10 distinct colours, enabling the machine to harmonise perfectly with it's environment.

Barista comfort
Barista lights ; Cranked Ergonomic Portafilters ; extraction mirror, Shot Timers, and APP CONNECT.

Precision, competition standard Shower Plates and Baskets
Machined and packaged exclusively for Conti by IMS, these components have exacting build criteria to ensure an even extraction. The homogenous hole diameter and polished inner surface perforations, help avoid any obstruction during the brewing process, meaning a consistent shot every time.

Flexible Installation
With the choice of either mains plumbing or a tank fill machine, in the latter, we have utilised a professional grade rotative pump for consistent pressure and low volume operation.

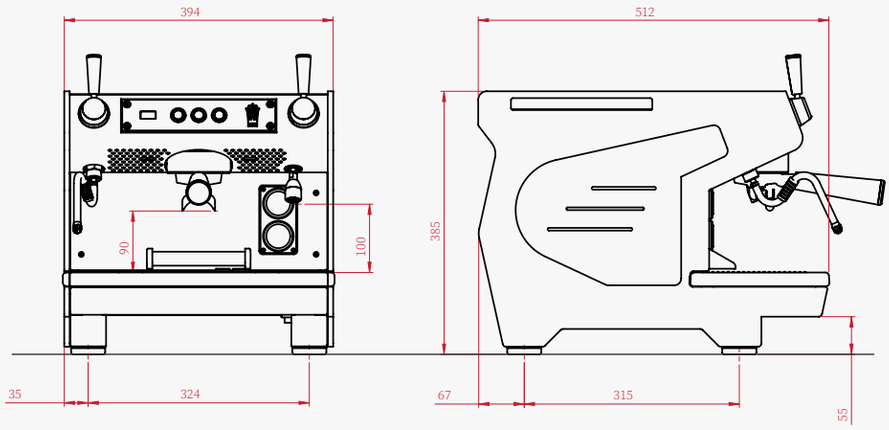

Height (mm)	385
Width (mm)	394
Depth (mm)	512
Weight (kg)	51
Steam Boiler Size (Litres)	2.75
Coffee Boiler Size (Litres)	0.9
Group Element (W)	100
Coffee Boiler Element (W)	1000
Steam Boiler Element (W)	1500
Total Power (W)	2900
Voltage (V)	230

*Please note total power can be adjusted within power management.

Colour Options:

- Black
- Traffic Grey
- Pebble Grey
- White
- Antique Pink
- Carmine Red
- Deep Orange
- Zinc Yellow
- Pastel Green
- Ocean Blue
- Sapphire Blue
- Pastel Blue

Conti UK
Email: info@conti-espresso.co.uk
Tel: 01763 249 398
www.conti-espresso.co.uk

Unit 12-13 Wyndmere Park,
Ashwell Road,
Steeple Morden, Royston
Hertfordshire SG8 0NZ

@contiespressouk
conti-espresso uk